34LYA051

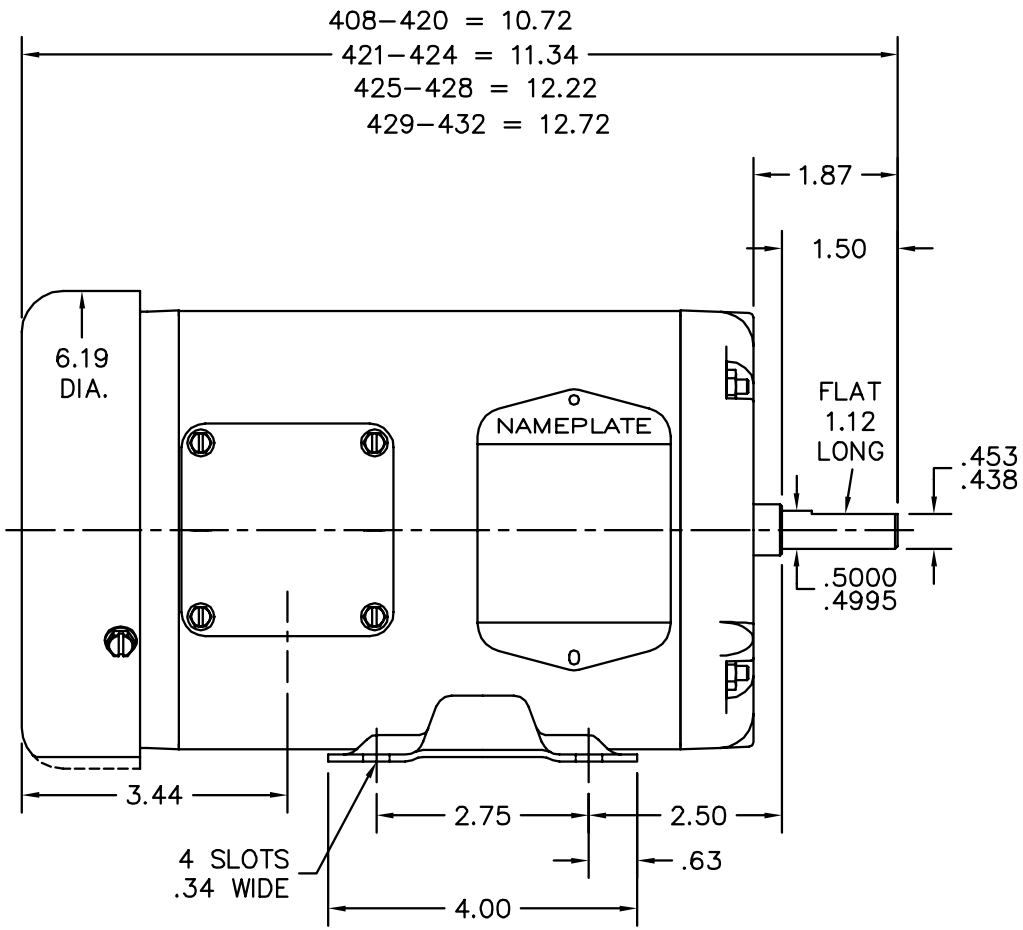

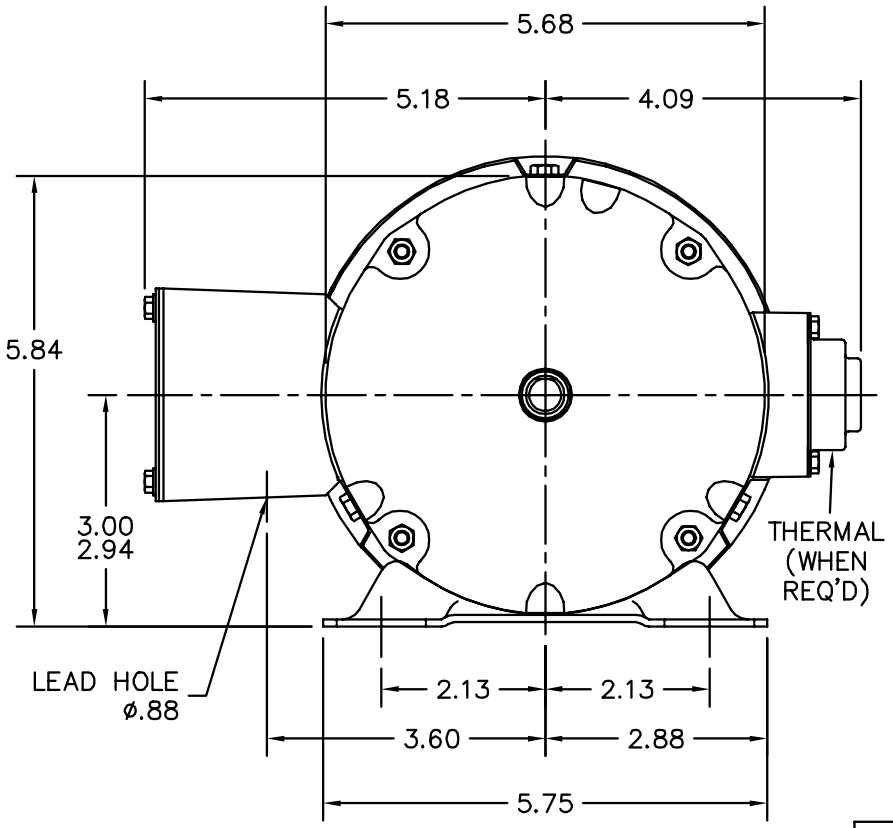

CUSTOMER IS RESPONSIBLE FOR DETERMINING THAT BALDOR'S PRODUCT WILL PERFORM SUITABLY IN THE INTENDED APPLICATION.

REV. DESC: CHG 34SH1174– TO 34SH1174		
REV. LTR: L	VERSION: 04	TDR: 000001004283
FILE: \AAA\00006\622	REVISED: 02:45:12 11/09/2016	BY: ENBENBO
MTL: –		

BALDOR

STD HORZ 34M NEMA 48 TEFC

SH 1 of 1

34LYA051