DATE APRIL 25, 2011	OUTLINE DIMENSIONS	MOTOR TYPE: AEHH8P-CF
CAT. #: NP7/52C	3-PHASE INDUCTION MOTOR	FRAME NO. 213TC

Pole	HP	kW	Hz	VOLT	Syn.Speed r/min(rpm)
2	7.5	5.6	60	230/460	3600

Ins	Rating	Dimension in	Approx Weight	Bearings
F	CONT.	inches	161 lbs.	DE: 6308ZZ NDE: 6306ZZ

Totally Enclosed Fan-Cooled Type. Squirrel-Cage Rotor.

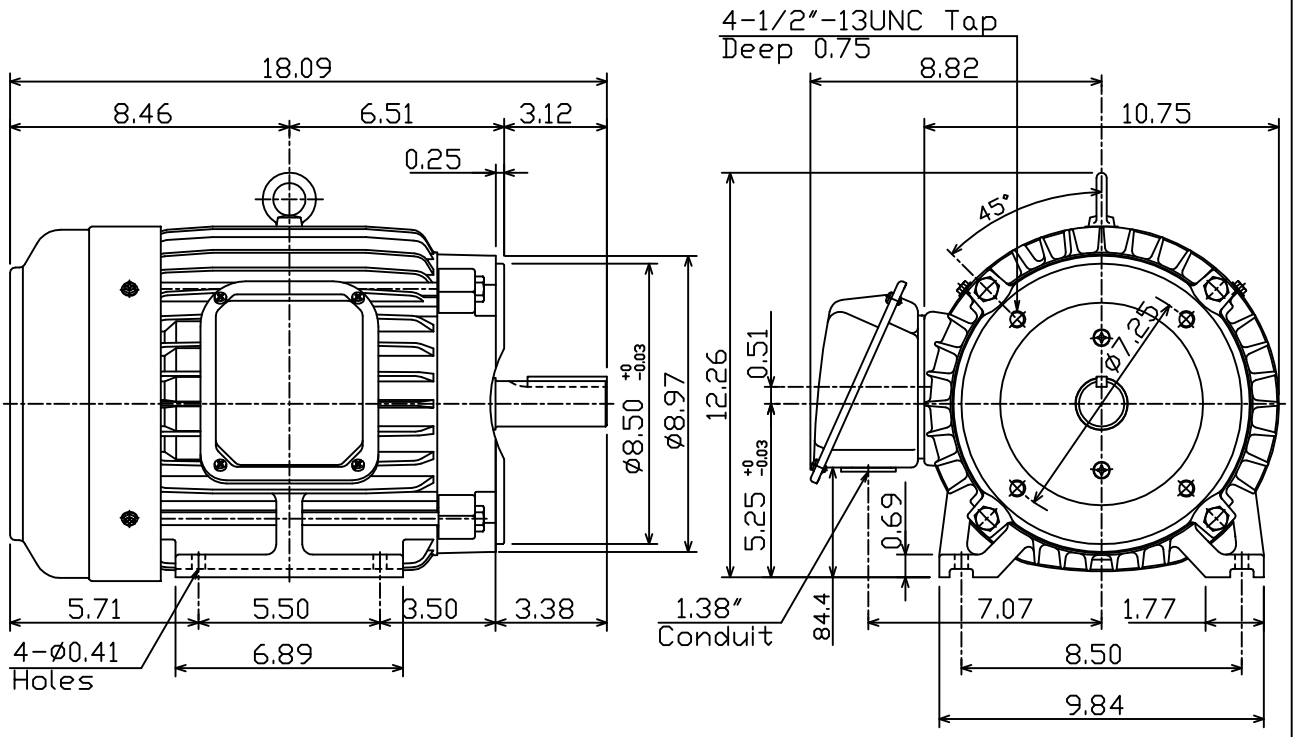

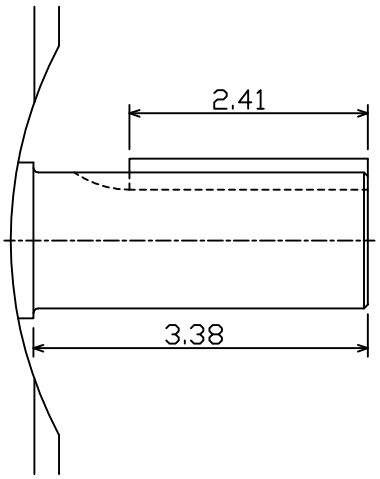

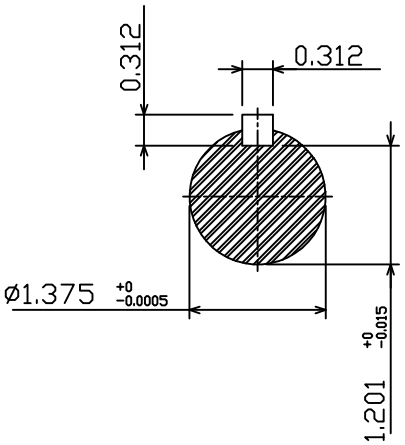

0				

DWN.	F.Z.HWANG	07-31-00	TECO Westinghouse	DWG NO.
CHKD.	C.S.LO	02-11-03		31049D191590
APPD.	Y.B.HUANG	02-11-03		