BALDOR
A MEMBER OF THE ABB GROUP

BALDOR • RELIANCE

Product Information Packet

PCL1319M

1.5HP,1725RPM,1PH,60HZ,56C,3528LC,OPEN

Copyright © All product information within this document is subject to Baldor Electric Company copyright © protection, unless otherwise noted.

Part Detail							
Revision:	AH	**Status:**	PRD/A	**Change #:**		**Proprietary:**	No
Type:	AC	**Prod. Type:**	3528LC	**Elec. Spec:**	35WGY725	**CD Diagram:**	CD0320
Enclosure:	OPEN	**Mfg Plant:**		**Mech. Spec:**	35K267	**Layout:**	35LYK267
Frame:	56C	**Mounting:**	F1	**Poles:**	04	**Created Date:**	
Base:	RG	**Rotation:**	R	**Insulation:**	B	**Eff. Date:**	06-25-2014
Leads:	4#16 A&J,2#18 B PH,1#14 #4TH					**Replaced By:**	
Literature:		**Elec. Diagram:**					

BALDOR
A MEMBER OF THE ABB GROUP

Nameplate NP1257L								
CAT.NO.	PCL1319M							
SPEC.	35K267Y725							
HP	1.5							
VOLTS	115/230							
AMP	14/7							
RPM	1725							
FRAME	56C	HZ	60	PH	1			
SER.F.	1.15	CODE	J	DES	-	CL	B	
NEMA-NOM-EFF	74	PF	94					
RATING	40C AMB-CONT							
CC		USABLE AT 208V						
DE	6205	ODE	6203					
ENCL	OPEN	SN						

BALDOR
A MEMBER OF THE ABB GROUP

Parts List

Part Number	Description	Quantity
SA024243	SA 35K267Y725	1.000 EA
RA020293	RA 35K267Y725	1.000 EA
OC3060C09	CYL OIL CAP 60MFD/240V	1.000 EA
TPCRT49CB	THERMAL 1PH 1.00 MAN 120C	1.000 EA
EC1460A05SP	ELEC CAP, 460-552 MFD, 125V, 2.06D X 3.	1.000 EA
TP5059	GENERIC THERMAL KIT	1.000 EA
NS2512A01	INSULATOR, CONDUIT BOX X	1.000 EA
35CB3007A17	35 CB .88 DIA @ 6:00, 1.00 MTO @ 3:00	1.000 EA
36GS1000SP	GASKET-CONDUIT BOX, .06 THICK #SV-330 LE	1.000 EA
51XB1016A07	10-16 X 7/16 HXWSSLD SERTYB	2.000 EA
11XW1032G06	10-32 X .38, TAPTITE II, HEX WSHR SLTD U	1.000 EA
HA6015A02	THERMAL RETAINER (PLATED)	1.000 EA
51XB1214A10	12-14 X 5/8HX WS SL SR TYBX	2.000 EA
35EP3201A03	STD FR EP OPEN-203BRG-35L OR M FRAME--LE	1.000 EA
51XW0832A07	8-32 X .44, TAPTITE II, HEX WSHR SLTD SE	2.000 EA
35CB3801SP	CAPACITOR COVER, CAST	1.000 EA
HA7010	CAPACITOR RETENTION CLAMP	1.000 EA
NS2501A02	INSULATOR, CAPACITOR BOX	1.000 EA
51XB1016A08	10-16X 1/2HXWSSLD SERTYB	2.000 EA
NS2500A02	INSULATOR, MAN THER PROT	1.000 EA
HW5100A03SP	WAVY WASHER (W1543-017)	1.000 EA
35EP3400A13	STD FACE MTD END PLATE OPEN NEMA 56C 05	1.000 EA
35AD2000	AIR BAFFLE	1.000 EA
60XW0632A06	6-32 X 3/8 TORX HEAD SCREW TAPTITE II	4.000 EA

BALDOR
A MEMBER OF THE ABB GROUP

Parts List (continued)

Part Number	Description	Quantity
51XN1032A20	10-32 X 1 1/4 HX WS SL SR	2.000 EA
35CB4521GX	CONDUIT BOX LID KIT	1.000 EA
51XW0832A07	8-32 X .44, TAPTITE II, HEX WSHR SLTD SE	4.000 EA
HW2501D13SP	KEY, 3/16 SQ X 1.375	1.000 EA
HA7000A04	KEY RETAINER 0.625 DIA SHAFTS	1.000 EA
85XU0407S04	4X1/4 U DRIVE PIN STAINLESS	2.000 EA
LB1087	LABEL,MANUAL RESET (ROLL LABEL)	1.000 EA
MJ1000A75	GREASE, POLYREX EM EXXON (USe 4824-15A)	0.050 LB
MG1000G27	MED CHARCOAL METALLIC GREY	0.017 GA
WD1000A15	3-520132-2 AMP FLAG (4M/RL NON-CANC/NON-	4.000 EA
SP5181A01	MODEL 35 LC TORQ STAT SWITCH LEAD ASSY	1.000 EA
HA3100A15	THRUBOLT 10-32 X 8.375	4.000 EA
LB1119N	WARNING LABEL	1.000 EA
LB1125C01	STD (STOCK) CARTON LABEL BALDOR WITH FLA	1.000 EA
LC0269	1PH,DV,REV,THERMAL,7 LD,L.AMP THRU HTR H	1.000 EA
NP1257L	ALUM UL CSA CC THERMAL REV MTG	1.000 EA
35PA1066	PACKING GROUP COMBINED PRINT	1.000 EA
LB1506	LABEL "AMERICAN MADE" 1.50 X 1.00	1.000 EA
MN416A01	TAG-INSTAL-MAINT no wire (1200/bx) 10/13	1.000 EA

BALDOR
A MEMBER OF THE ABB GROUP

AC Induction Motor Performance Data

Record # 10305 - Typical performance - not guaranteed values

Winding: 35WGY725-R001	**Type:** 3528LC	**Enclosure:** OPEN

Nameplate Data				230 V, 60 Hz: High Voltage Connection	
Rated Output (HP)	1.5			Full Load Torque	4.5 LB-FT
Volts	115/230			Start Configuration	direct on line
Full Load Amps	14/7			Breakdown Torque	11.6 LB-FT
R.P.M.	1725			Pull-up Torque	7.9 LB-FT
Hz	60	Phase	1	Locked-rotor Torque	8.4 LB-FT
NEMA Design Code	-	KVA Code	J	Starting Current	48 A
Service Factor (S.F.)	1.15			No-load Current	2.7 A
NEMA Nom. Eff.	74	Power Factor	94	Line-line Res. @ 25ºC	1.86 Ω A Ph 2.55 Ω B Ph
Rating - Duty	40C AMB-CONT			Temp. Rise @ Rated Load	38°C
S.F. Amps				Temp. Rise @ S.F. Load	43°C

Load Characteristics 230 V, 60 Hz, 1.5 HP

% of Rated Load	25	50	75	100	125	150	S.F.
Power Factor	75	89	93	94	94	93	94
Efficiency	52.5	67.5	72	74.9	74.6	71.5	74.7
Speed	1790	1780	1772	1753	1743	1718	1747
Line amperes	3.4	4.2	5.5	7	8.4	10.8	7.84

BALDOR A MEMBER OF THE ABB GROUP

Performance Graph at 230V, 60Hz, 1.5HP Typical performance - Not guaranteed values

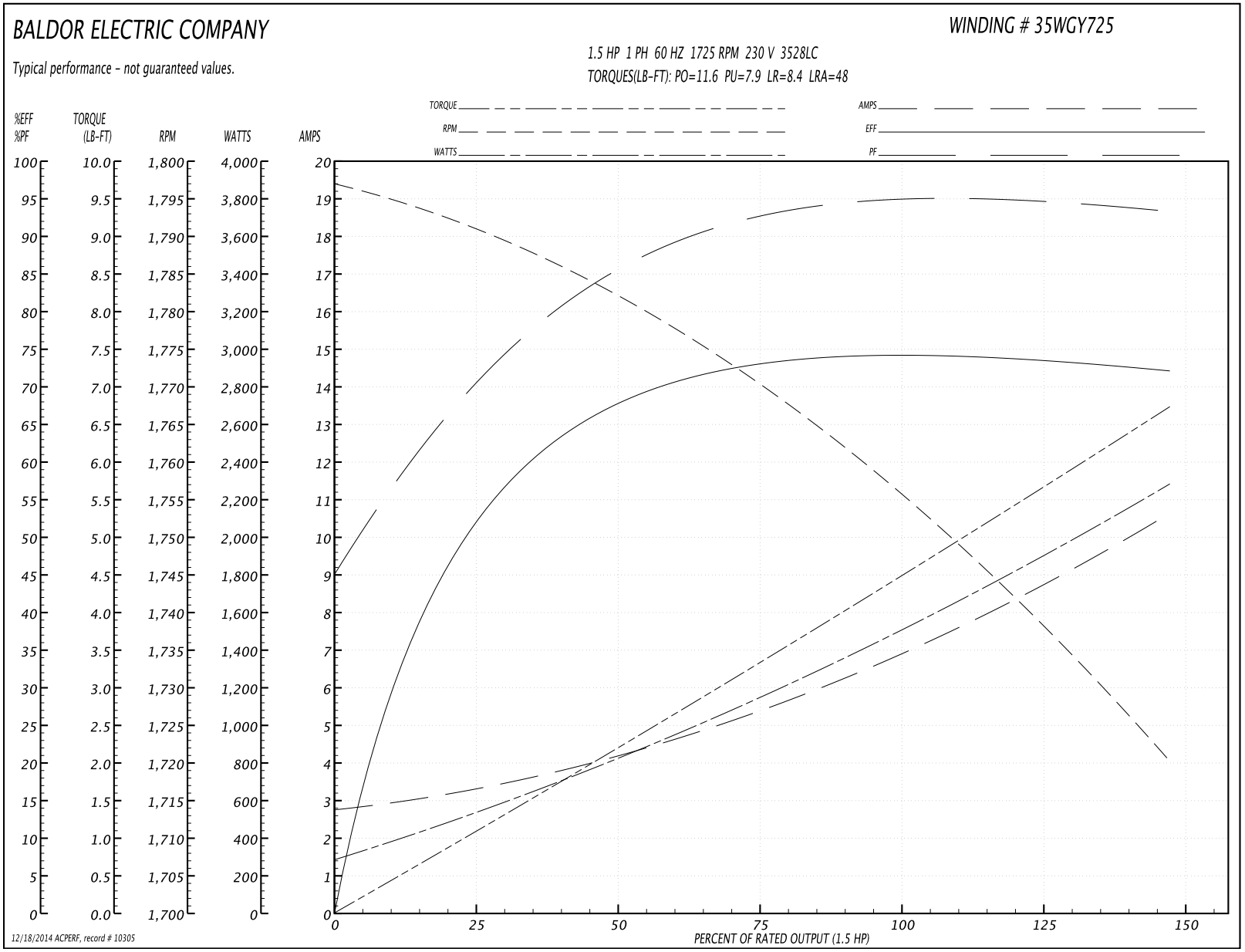

BALDOR
A MEMBER OF THE ABB GROUP

35LYK267

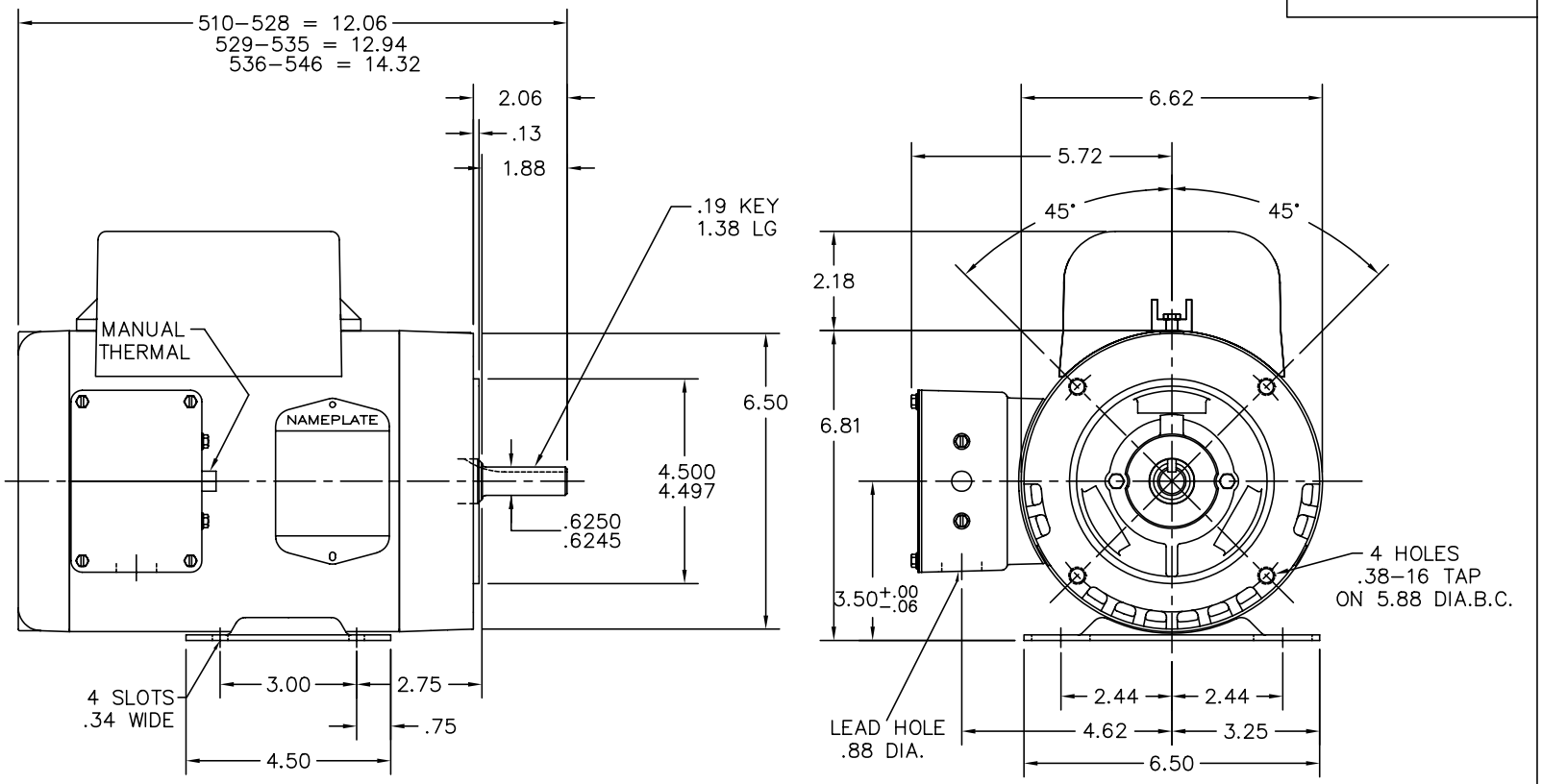

CUST. NAME	CUST. P.O.	CERTIFIED BY	MODEL	INSUL	AMB
H.P.	MTG	TYPE	R.P.M.	VOLTS	ENCL	PHASE	FREQ	FRAME
REV. DESC: CHG'D CONDUIT BOX AND LID (SEE EC09)								
REV. LTR: F	BY: JED	REVISED: 04/14/99 2:21	TDR: 0171810	BALDOR ELECTRIC Co.				
35LYK267		FILE: AAA00015102	MDL: –	STD HORZ FACE MTD 56C OPEN 35LC W/1" MTO IN KBOX				
		MTL: –						

35LYK267

BALDOR A MEMBER OF THE ABB GROUP

CD0320

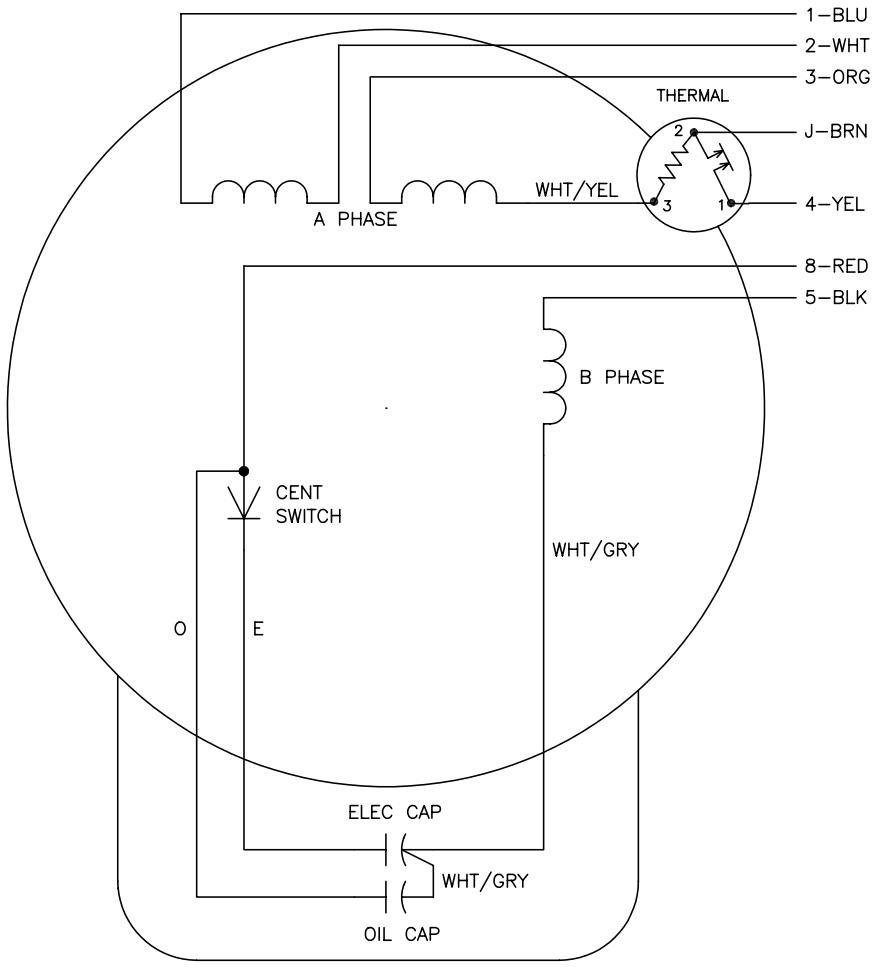

	LINE A	LINE B	JOIN	JOIN
HIGH STD	1,8	4	2,3,5	J
HIGH OPP	1,5	4	2,3,8	J
LOW STD	1,3,8	4	–	2,J,5
LOW OPP	1,3,5	4	–	2,J,8

NOTES:

1. STANDARD ROTATION IS CCW FACING END OPPOSITE SHAFT EXTENSION.
2. MULTIPLE CAPACITORS ARE CONNECTED IN PARALLEL UNLESS OTHERWISE SPECIFIED.
3. LEAD COLORS ARE OPTIONAL. LEADS MUST ALWAYS BE NUMBERED AS SHOWN.

REV. DESC: REVISE TO SHOW OPTIONAL COLORS			
REV. LTR: F	BY: JLP	REVISED: 04/08/99 4:42	TDR: 0178636
CD0320		FILE: AAA00007422	MDL: –
		MTL: –	

BALDOR ELECTRIC Co.

TYPE LC, DV, REV, THERMAL, B PH AMPS THRU HTR HVC, 7 LEAD

CD0320

BALDOR A MEMBER OF THE ABB GROUP