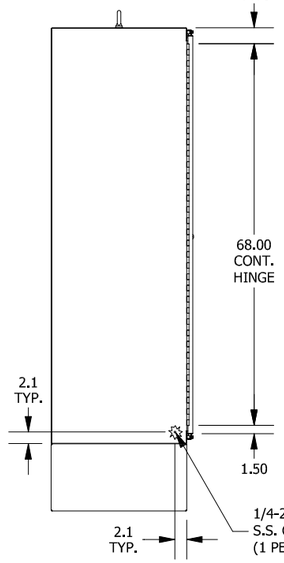

LEFT SIDE VIEW

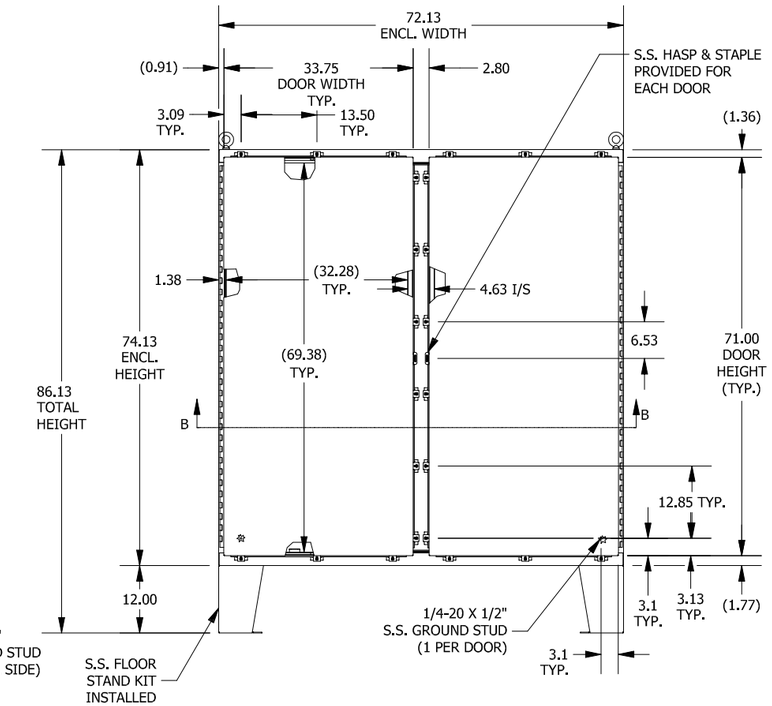

FRONT VIEW

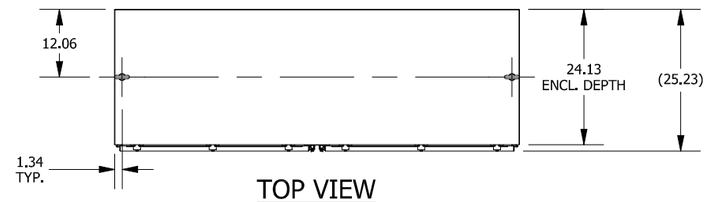

TOP VIEW

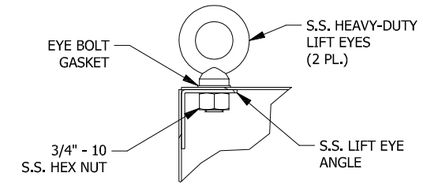

DETAIL AD
(LIFT EYE ASSEMBLY VIEW)

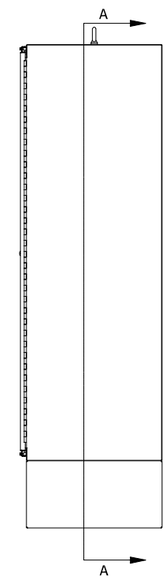

RIGHT SIDE VIEW

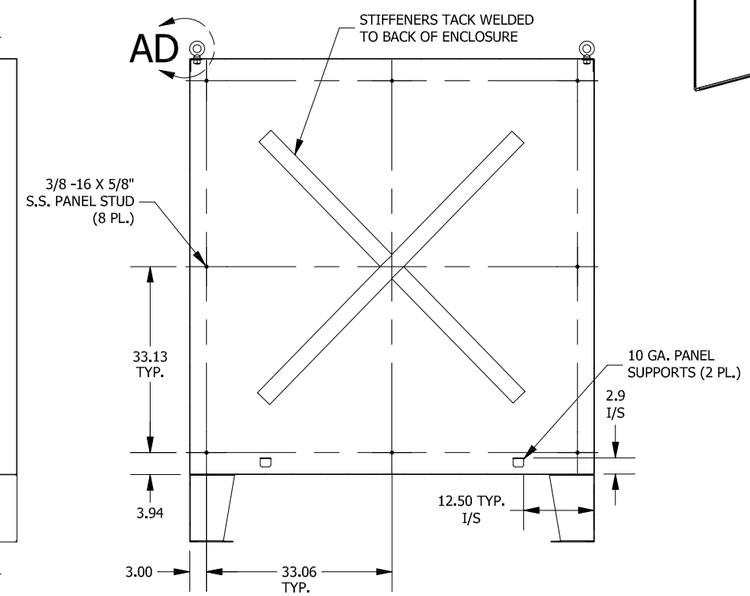

SECTION A-A
(INSIDE BACK VIEW OF ENCLOSURE)

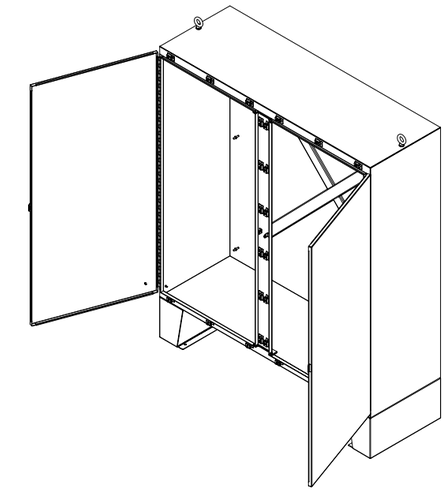

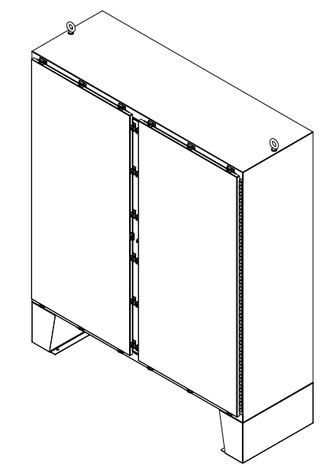

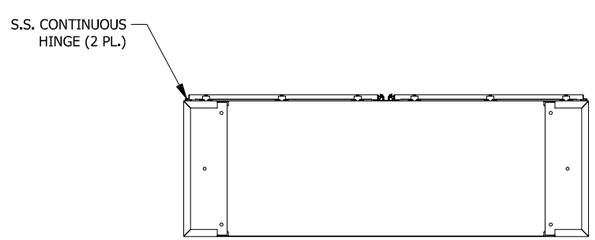

BOTTOM VIEW

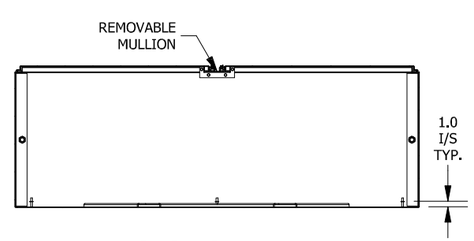

SECTION B-B
(INSIDE VIEW OF TOP)

PART#: SSN4D747224
(DATA SUBJECT TO CHANGE WITHOUT NOTICE)

THIS DRAWING IS PROPERTY OF HUBBELL INC. WIEGMANN
ALL INFORMATION IS PROPRIETARY AND NOT TO BE DUPLICATED