BALDOR
A MEMBER OF THE ABB GROUP

BALDOR • RELIANCE

Product Information Packet

VHM2551T

75 HP, 1770 RPM, 1400M,

Copyright © All product information within this document is subject to Baldor Electric Company copyright © protection, unless otherwise noted.

Part Detail

Revision:	J	**Status:**	INA/A	**Change #:**		**Proprietary:**	No
Type:	AC	**Prod. Type:**	1462M	**Elec. Spec:**	14WGX239	**CD Diagram:**	CD0180
Enclosure:	OPEN	**Mfg Plant:**		**Mech. Spec:**	14E288	**Layout:**	14LYE288
Frame:	365HP	**Mounting:**	F1	**Poles:**	04	**Created Date:**	
Base:	N	**Rotation:**	R	**Insulation:**	F	**Eff. Date:**	07-14-2011
Leads:	9#4					**Replaced By:**	
Literature:		**Elec. Diagram:**					

BALDOR
A MEMBER OF THE ABB GROUP

Nameplate NP1256L							
CAT.NO.							
SPEC.	14E288X239G1						
HP	75						
VOLTS	230/460						
AMP	180/90						
RPM	1775						
FRAME	365HP	HZ	60	PH	3		
SER.F.	1.15	CODE	G	DES	B	CLASS	F
NEMA-NOM-EFF	94.1	PF	83				
RATING	40C AMB-CONT						
CC	010A	USABLE AT 208V	193				
DE	6314	ODE	6312				
ENCL	OPEN	SN					

BALDOR A MEMBER OF THE ABB GROUP

Parts List

Part Number	Description	Quantity
SA124529	SA 14E288X239G1	1.000 EA
RA114945	RA 14E288X239G1	1.000 EA
10CB3000A52	KOBX,MACH W/3.50 MTG PAT, 2.00 NPT, #26	1.000 EA
10XN3118K16	5/16-18 X 1" GRADE #5, STL, ZINC PLATE	4.000 EA
HW1001A31	LOCKWASHER 5/16, ZINC PLT.591 OD, .319 I	4.000 EA
WD1000B16	T&B CX70TN TERMINAL	1.000 EA
51XF2520A08	SCREW, HEX SER SLT HD, ZN 1/4-20 X .50 L	1.000 EA
14EP1204A01	FREP, MACH	1.000 EA
14AD2002	AIR DEFLECTOR, 314 OPEN P-BASE	1.000 EA
10XN2520K10	1/4-20 X 5/8" HX HD SCRW.GRADE 5, XINC P	6.000 EA
HW1001A25	LOCKWASHER 1/4, ZINC PLT .493 OD, .255 I	6.000 EA
10XN5013K64	HEX HD SCREW, 1/2-13X4.00GRADE 5, ZINC P	4.000 EA
HW1001A50	LOCKWASHER 1/2, ZINC PLT,.879 OD, .509 I	4.000 EA
HW4600B82	V-RING SLINGER 2.58 X 3.270 X 0.280	1.000 EA
HW5100A15	W4997-050 WVY WSHR (WB)	1.000 EA
14EP1501A02	PUEP, MACH W/314 BRG	1.000 EA
10XN3816K92	3/8-16 X 5.75 HEX HEAD CAP SCREW GRADE 5	4.000 EA
HW1001A38	LOCKWASHER 3/8, ZINC PLT .688 OD, .382 I	4.000 EA
10XN5013K52	1/2-13 X3 1/4 HEX HD BOLT	4.000 EA
HW1001A50	LOCKWASHER 1/2, ZINC PLT,.879 OD, .509 I	4.000 EA
14FH1501A01	DRIP COVER, MACH	1.000 EA
HW3201A14	.75-10 EYEBOLT W/2.50 SHANK	2.000 EA
HW1000A75	WASHER, 3/4 FLAT, ZN	2.000 EA
HW1001A75	WASHER, 3/4 SPLT LK, ZN	2.000 EA

BALDOR
A MEMBER OF THE ABB GROUP

Parts List (continued)

Part Number	Description	Quantity
10CB3500	CONDUIT BOX LID, CAST	1.000 EA
51XW2520A12	.25-20 X .75, TAPTITE II, HEX WSHR SLTD	4.000 EA
HW2501G32	KEY, 3/8 SQ X 3.750	1.000 EA
LB1182	WARNING LABEL FOR MOTORS WITH EYENUTS	1.000 EA
LB5040	INSTRUCT TAG, REPL W/MN416 OR MN416A01	1.000 EA
HW4500A03	GREASE FITTING, .125 NPT 1610(ALEMITE) 8	1.000 EA
HW4500A17	317400 ALEMITE GREASE RELIEF	1.000 EA
HA4051A00	PLASTIC CAP FOR GREASE FITTING	1.000 EA
MJ1000A75	GREASE, POLYREX EM EXXON (USe 4824-15A)	0.220 LB
HW4500A03	GREASE FITTING, .125 NPT 1610(ALEMITE) 8	1.000 EA
HW4500A17	317400 ALEMITE GREASE RELIEF	1.000 EA
HA4051A00	PLASTIC CAP FOR GREASE FITTING	1.000 EA
MG1000G27	MED CHARCOAL METALLIC GREY	0.140 GA
85XU0407A04	#4-7 X 1/4 DRIVE PIN	2.000 EA
LB1119N	WARNING LABEL	1.000 EA
LC0181	CONNECTION LABEL	1.000 EA
NP1256L	ALUM UL CSA CC	1.000 EA
14PA1030	PKGP CRATE 314 LGFANCOV RISE36X30-1/2X30	1.000 EA
LB1357	ENERGY GUIDE LABEL (BOX LABEL)	1.000 SH
MN416A01	TAG-INSTAL-MAINT no wire (1200/bx) 10/13	1.000 EA

BALDOR
A MEMBER OF THE ABB GROUP

AC Induction Motor Performance Data

Record # 20769 - Typical performance - not guaranteed values

Winding: 14WGX239-R002	**Type:** 1462M	**Enclosure:** OPEN

Nameplate Data				460 V, 60 Hz: High Voltage Connection	
Rated Output (HP)	75			Full Load Torque	221 LB-FT
Volts	230/460			Start Configuration	direct on line
Full Load Amps	180/90			Breakdown Torque	594 LB-FT
R.P.M.	1775			Pull-up Torque	225 LB-FT
Hz	60	Phase	3	Locked-rotor Torque	365 LB-FT
NEMA Design Code	B	KVA Code	G	Starting Current	562 A
Service Factor (S.F.)	1.15			No-load Current	33.3 A
NEMA Nom. Eff.	94.1	Power Factor	83	Line-line Res. @ 25ºC	0.075 Ω
Rating - Duty	40C AMB-CONT			Temp. Rise @ Rated Load	29°C
S.F. Amps				Temp. Rise @ S.F. Load	35°C
				Rotor inertia	11.7 LF²

Load Characteristics 460 V, 60 Hz, 75 HP

% of Rated Load	25	50	75	100	125	150	S.F.
Power Factor	50	70	79	83	84	84	84
Efficiency	89.7	93.4	94.2	94.2	93.8	93.1	94
Speed	1796	1791	1787	1782	1777	1771	1779
Line amperes	39.2	53.2	70.7	89.9	111.3	134.3	102.7

BALDOR A MEMBER OF THE ABB GROUP

Performance Graph at 460V, 60Hz, 75.0HP Typical performance - Not guaranteed values

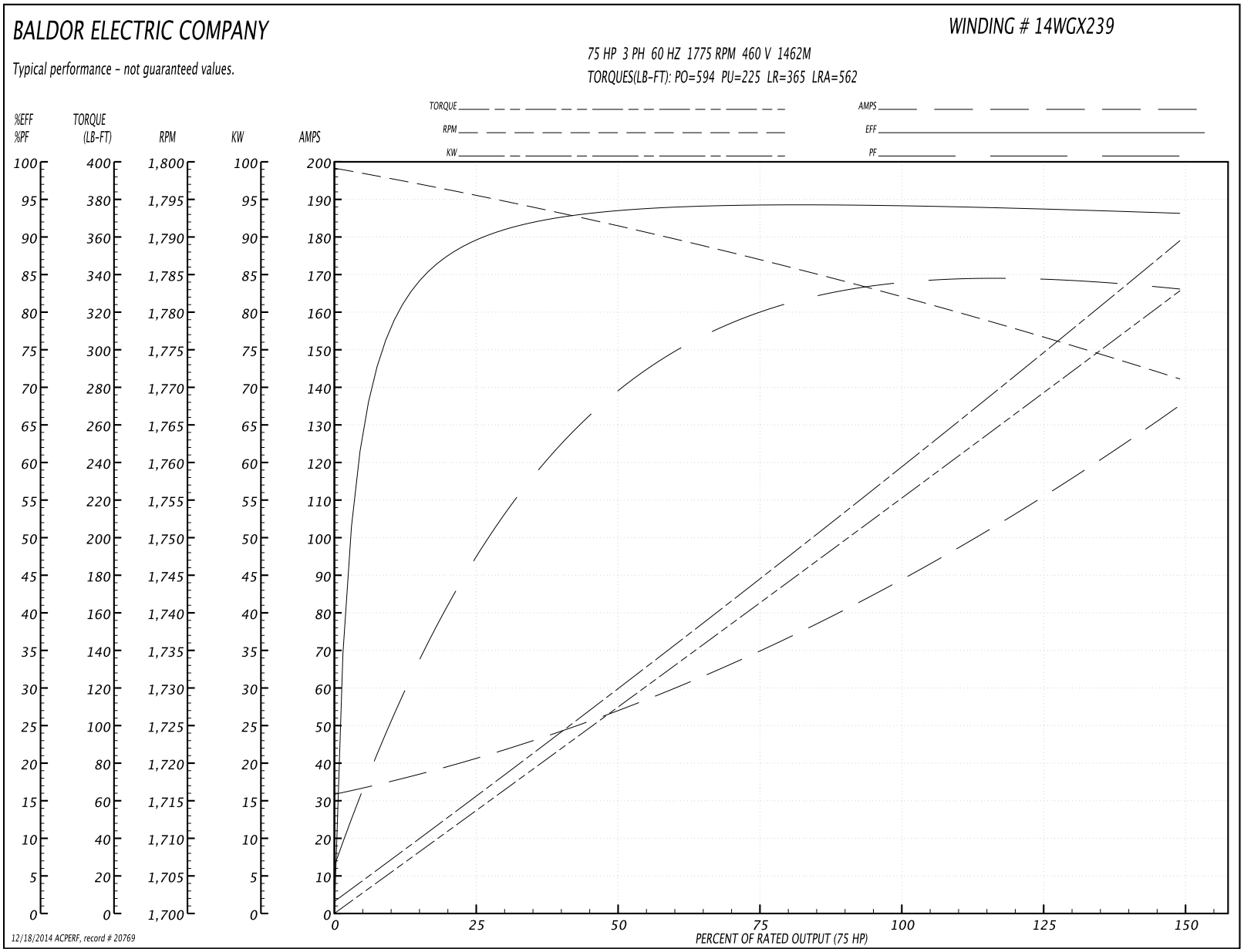

BALDOR
A MEMBER OF THE ABB GROUP

14LYE288

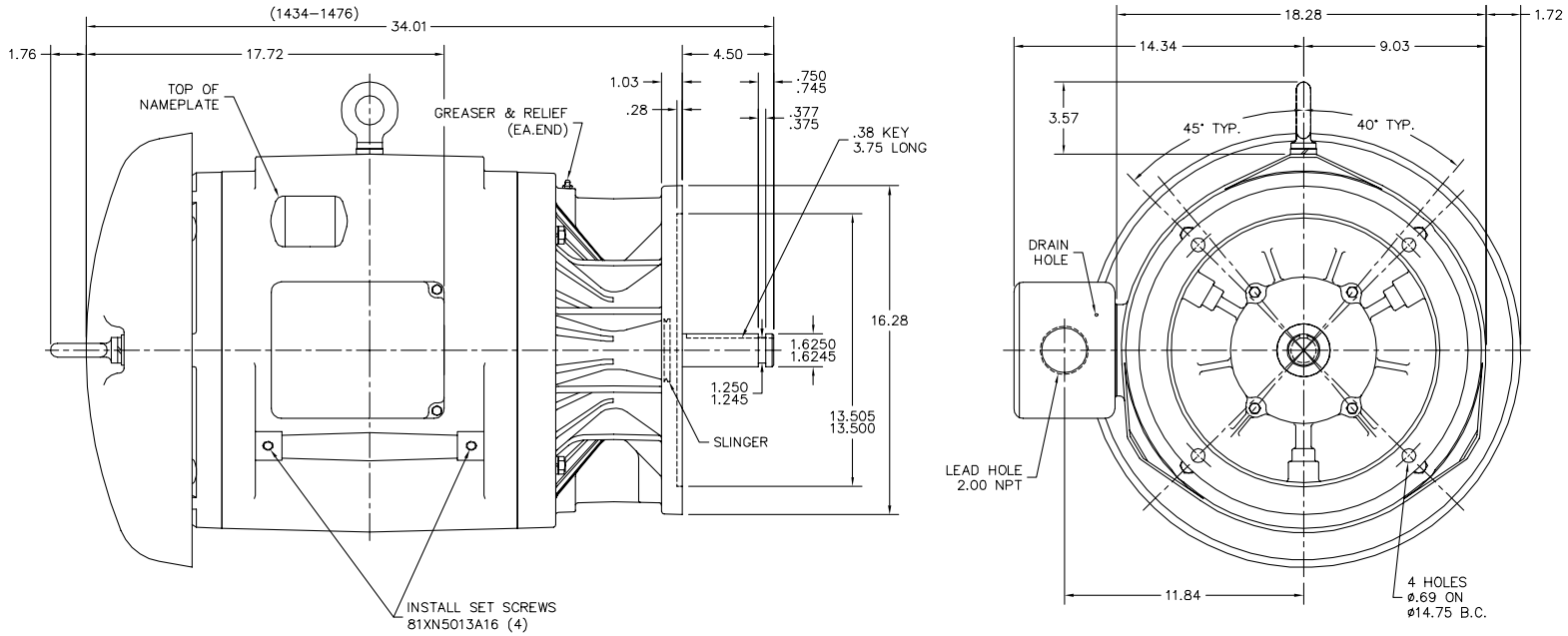

CUSTOMER IS RESPONSIBLE FOR DETERMINING THAT MOTOR PERFORMANCE IS SUITABLE IN THE APPLICATION.

REV. DESC: OMMITTED KOBX & LID GASKETS/ UPDATE DWG.		
REV. LTR: A	VERSION: 01	TDR: 000000452584
FILE: \AAA\00123\871	REVISED: 16:37:38 01/04/2008	BY: ENCHRGO
MTL: –		

BALDOR • DODGE • RELIANCE

VERT OPEN 364–5HP W/314 PU. BR

14LYE288

BALDOR
A MEMBER OF THE ABB GROUP

CD0180

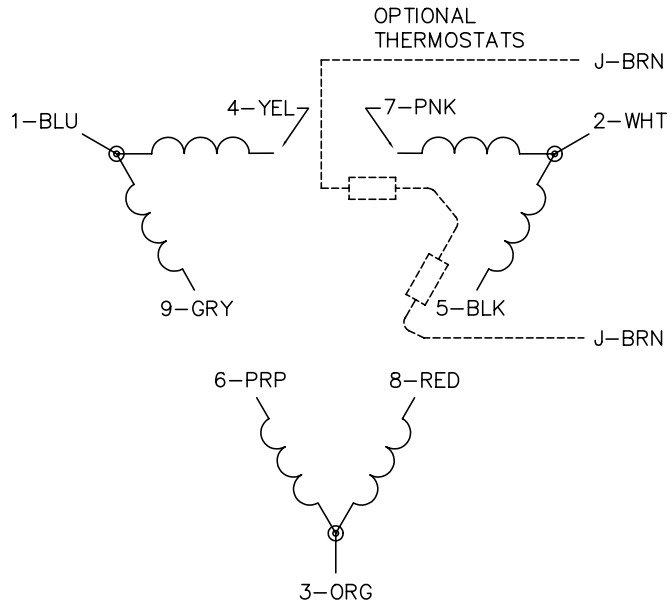

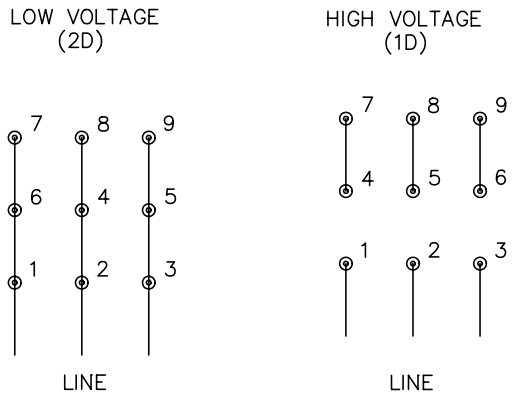

NOTES:

1. INTERCHANGE ANY TWO LINE LEADS TO REVERSE ROTATION.
2. OPTIONAL THERMOSTATS ARE PROVIDED WHEN SPECIFIED.
3. ACTUAL NUMBER OF INTERNAL PARALLEL CIRCUITS MAY BE A MULTIPLE OF THOSE SHOWN ABOVE.
4. LEAD COLORS ARE OPTIONAL. LEADS MUST ALWAYS BE NUMBERED AS SHOWN.

CD0180

REV. DESC: REVISE TO SHOW OPTIONAL COLORS			
REV. LTR: C	BY: JLP	REVISED: 01/21/99 2:28	TDR: 0171435
CD0180		FILE: AAA00005148	MDL: –
		MTL: –	

BALDOR ELECTRIC Co.

3PH, DV, 9 LEADS, DELTA CONNECTION

BALDOR
A MEMBER OF THE ABB GROUP