DATE Jan. 14, 2011	OUTLINE DIMENSIONS	MOTOR TYPE: AMRCNH
CAT. #: VHP0204	3-PHASE INDUCTION MOTOR	FRAME NO. 256TP

Pole	HP	kW	Hz	VOLT	Syn.Speed r/min(rpm)
4	20	15	60	230/460	1800

Ins	Rating	Dimension in	Approx Weight	Bearings
F	CONT.	inch	339 lbs	DE: 6309ZZC3 NDE: 7311B

NEMA Weather Protected TYPE I (WP I)Squirrel-cage Rotor.

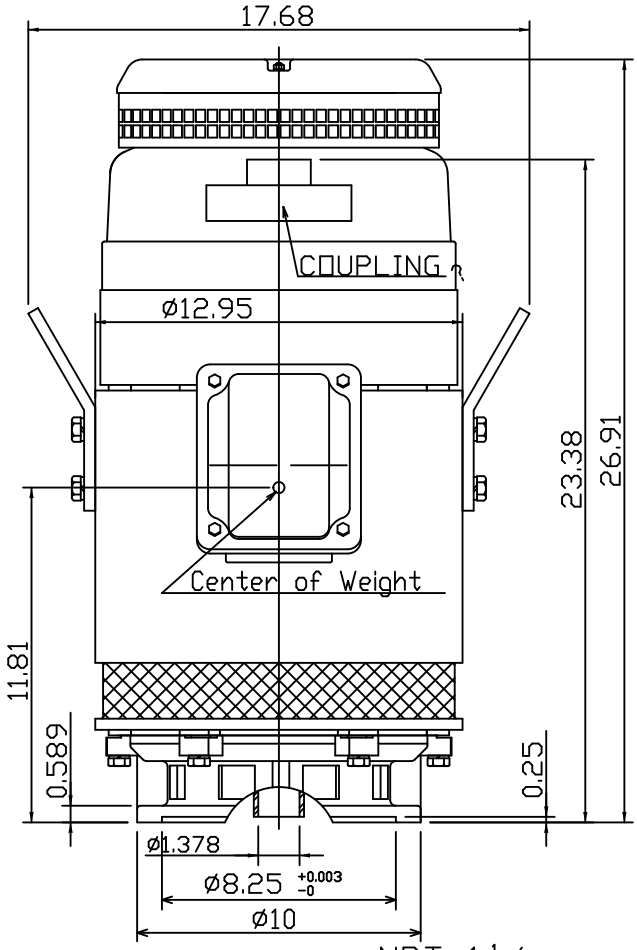

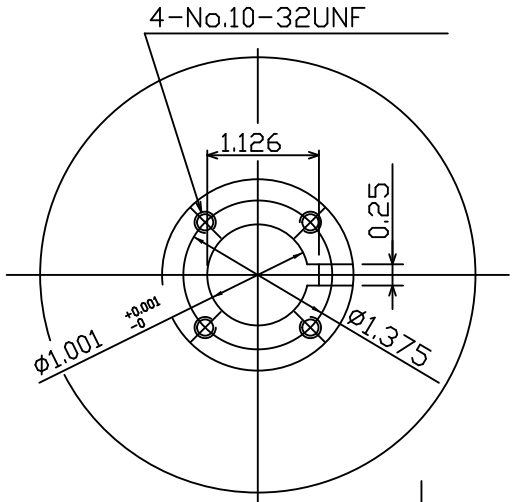

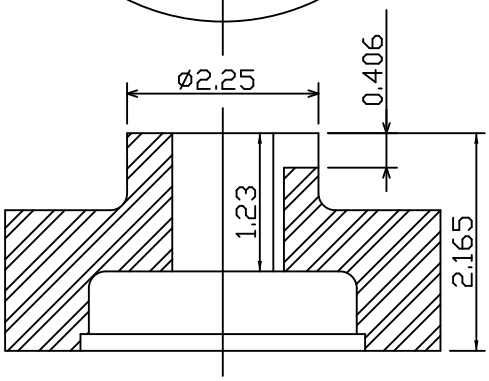

Coupling Dimension

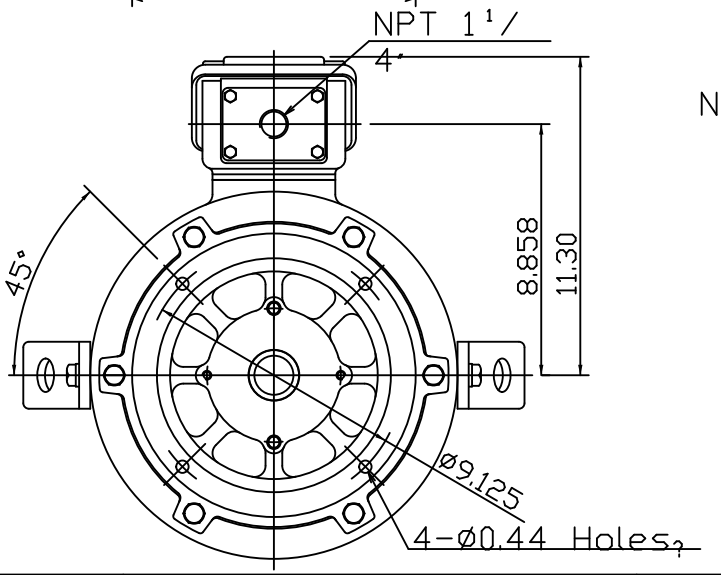

Note:
1. Downthrust: 3350lbs L10 - 8800 hours
2. Rotation: C.C.W Viewed from Top
3. With N.R.R.
4. Approx Reed Frequencies: 83 Hz

1	12.27.08	

DWN.	?????????	12 15 08	TECO Westinghouse	DWG NO. 31057H807091
CHKD.	???????	01 09 09		
APPD.	????????	01 09 09		